Standard version:

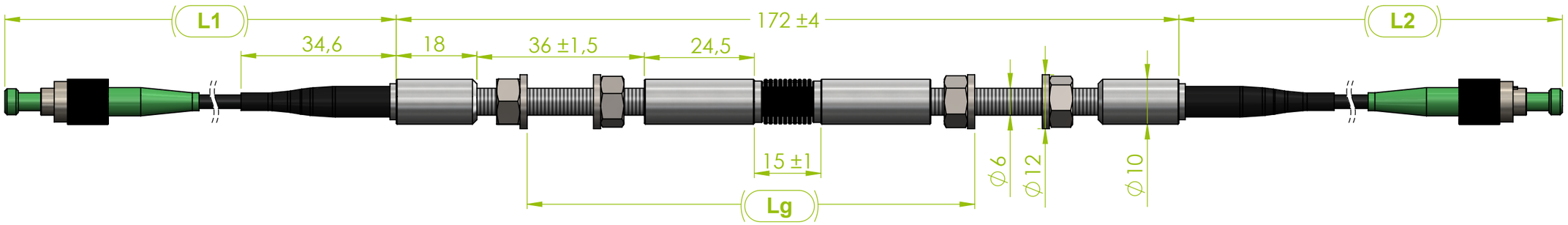

Optional accessories:

- Mounting Brackets MBS-03:

M4 DIN912 | XY M4 DIN912 | 1x M6 Thread | Rope D15,7mm 2xM4

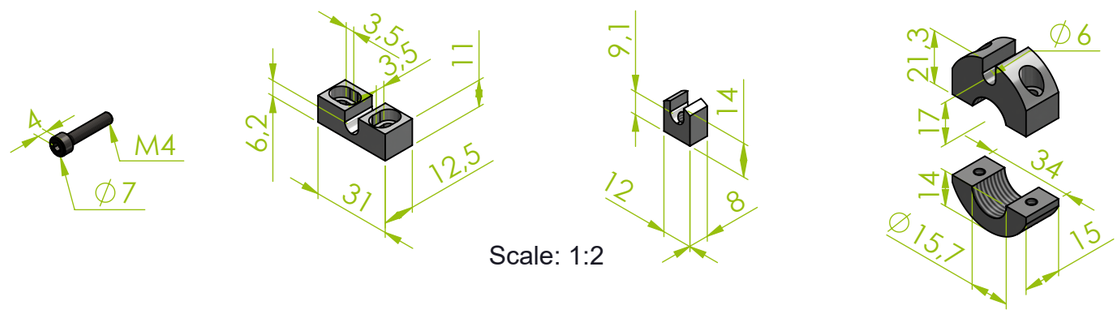

Scale: 1:2

- LCP-03 Longer Dyneema cable pigtail with 1x WSP-02 (Watertight Splice Protection) and with 1x WCP-01 Watertight Connector Protection 1x FC/APC IP67:

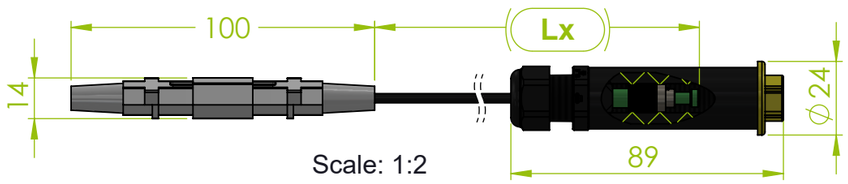

Scale: 1:2

3D View:
Scale: 1:2

Parameter	Length	Tolerance
L1	1000 mm (standard)	±50 mm
L2	1000 mm (standard)	±50 mm
Lg	100 mm	±1 mm
Lx	Optional: Custom-Defined Length	±xx mm

TITLE: MS-03 Mountable Strain Sensor			
REVISION: F	SCALE: 1:1	DRAWN BY, DATE: Branislav Pikus 15.07.2019	sylex FIBER OPTICS
	STATUS: In Work	CHECKED BY, DATE: Branislav Pikus 27.11.2020	
	DIMENSIONS IN MM (UNLESS SPECIFIED)	APPROVED BY, DATE: Tomáš Šalát 27.11.2020	
NAME OF CAD FILE: MS-03 WEB	PRODUCT NUMBER: F-MSX-003-xxx-xxx/xx/xxxx	DRAWING NUMBER: MS-03 WEB	SHEET No: 1 of 1
THIS DRAWING CONTAINS INFORMATION THAT IS PROPERTY OF SYLEX s.r.o AND SHOULD NOT BE USED WITHOUT WRITTEN PERMISSION			SIZE A3